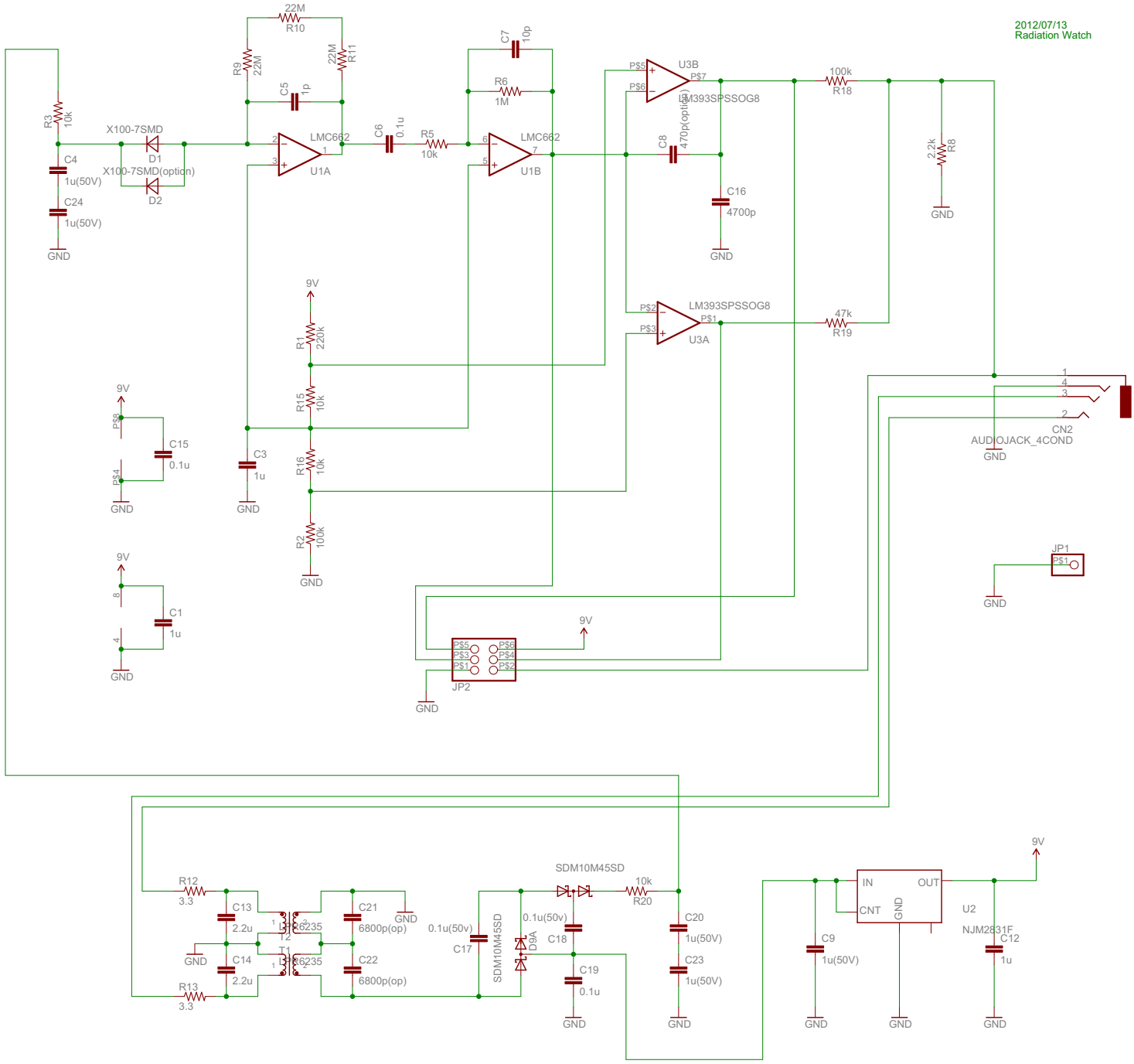
2012/07/13
Radiation Watch
22M
R10
R9
22M
22M
R11
C5
1p
C7
10p
R6
1M
R3
10k
X100-7SMD
D1
X100-7SMD(option)
D2
C4
1u(50V)
C24
1u(50V)
GND
LMC662
U1A
C6
0.1u
R5
10k
LMC662
U1B
U3B
LM393SPSSOG8
470p(option)
C8
C16
4700p
100k
R18
2.2k
R8
9V
R1
220k
R15
10k
R16
10k
R2
100k
C3
1u
C15
0.1u
LM393SPSSOG8
U3A
47k
R19
CN2
AUDIOJACK_4COND
JP1
JP2
C1
1u
R12
3.3
R13
3.3
C13
2.2u
C14
2.2u
T1
6235
C21
6800p(op)
C22
6800p(op)
0.1u(50v)
C17
SDM10M45SD
D9A
0.1u(50v)
C18
C19
0.1u
SDM10M45SD
10k
R20
C20
1u(50V)
C23
1u(50V)
IN
OUT
CNT
GND
U2
NJM2831F
C9
1u(50V)
C12
1u